Nutritional Modulation of Sleep Latency, Duration, and Efficiency: A Randomized, Repeated-Measures, Double-Blind Deception Study

CARL LANGAN-EVANS[1], MARK A. HEARRIS[1], CHLOE GALLAGHER[1], STEPHEN LONG[1], CRAIG THOMAS[2], ANDREW D. MOSS[1], WILLIAM CHEUNG[3], GLYN HOWATSON[3,4], and JAMES P. MORTON[1]

[1]Research Institute for Sport and Exercise Sciences, Liverpool John Moores University, Liverpool, UNITED KINGDOM; [2]School of Sport, Exercise and Health Sciences (SSEHS) Loughborough University, Loughborough, UNITED KINGDOM; [3]Department of Sport, Exercise and Rehabilitation and Applied Sciences, Northumbria University, Newcastle upon Tyne, UNITED KINGDOM; and [4]Water Research Group, School of Environmental Sciences and Development, North West University, Potchefstroom, SOUTH AFRICA

ABSTRACT

LANGAN-EVANS, C., M. A. HEARRIS, C. GALLAGHER, S. LONG, C. THOMAS, A. D. MOSS, W. CHEUNG, G. HOWATSON, and J. P. MORTON. Nutritional Modulation of Sleep Latency, Duration, and Efficiency: A Randomized, Repeated-Measures, Double-Blind Deception Study. *Med. Sci. Sports Exerc.*, Vol. 55, No. 2, pp. 289−300, 2023. **Purpose:** This study aimed to test the hypothesis that a novel nutritional blend composed of tryptophan, glycine, magnesium, tart cherry powder, and L-theanine enhances subjective and objective measures of sleep during free living conditions. **Methods:** In a randomized, repeated-measures crossover and double-blind deception design, participants (n = 9 males and 7 females, age = 24 ± 3 yr, body mass = 69.8 ± 11.6 kg, stature = 170.8 ± 9.1 cm) completed a 3-d familiarization period, followed by 3-d intervention and placebo trials. Subjective Pittsburgh Quality Sleep Index, Core Consensus Sleep Diary, and Karolinska Sleepiness Scale survey tools, alongside objective actigraphy measures of sleep, were assessed, with daily nutritional intake, activity, and light exposure standardized between trials. Participants provided daily urine samples for assessment of targeted and untargeted metabolomes. **Results:** The intervention trial reduced sleep onset latency (−24 ± 25 min; P = 0.002), increased total sleep time (22 ± 32 min; P = 0.01), and increased sleep efficiency (2.4% ± 3.9%; P = 0.03), while also reducing morning sleepiness (P = 0.02). Throughout the study, 75% of participants remained blinded to sleep assessment as a primary outcome measure, with 56% subjectively indicating improved sleep during the intervention trial. Metabolomic analysis highlighted several significantly altered metabolomes related to sleep regulation between trials, inclusive of 6-sulfatoxymelatonin, D-serine, and L-glutamic acid. **Conclusions:** Data demonstrate that using the proposed blend of novel nutritional ingredients during free living conditions reduced sleep onset latency, increased total sleep duration, and increased sleep efficiency, leading to reduced perceptions of morning sleepiness. These effects may be mediated by the up-regulation of key metabolites involved in the neurophysiological modulation of the sleep/wake cycle. **Key Words:** ACTIGRAPHY, NUTRITION, ERGOGENIC DIETARY SUPPLEMENTS, METABOLOMICS

Address for correspondence: Carl Langan-Evans, Ph.D., Research Institute for Sport and Exercise Sciences, Faculty of Science, Liverpool John Moores University, Tom Reilly Building, Liverpool, Merseyside L3 2EX, United Kingdom; E-mail: C.LanganEvans@ljmu.ac.uk.
Submitted for publication June 2022.
Accepted for publication August 2022.

0195-9131/23/5502-0289/0
MEDICINE & SCIENCE IN SPORTS & EXERCISE®
Copyright © 2022 by the American College of Sports Medicine
DOI: 10.1249/MSS.0000000000003040

Sleep is an essential process in aiding the recovery of several psychophysiological functions, including learning and memory, the central nervous and metabolic cost of daytime activities, and the restoration of the immune and endocrine systems (1). To maintain optimal health and daytime functioning, it is recommended that adults achieve at least 7 h of total sleep time (TST) with ≥85% sleep efficiency (SE) (2,3). However, a large scale global survey of participants 15 to 65 yr of age has highlighted that 56% of respondents from the United States, alongside 31% in Western Europe and 23% in Japan, have experienced some form of sleep disturbance,

Copyright © 2022 by the American College of Sports Medicine. Unauthorized reproduction of this article is prohibited.

such as poor sleep induction (55%–69%), maintenance (78%–63%), and overall sleep quality (52%–31%) (4). The effect of these sleep disruptions often results in deleterious effects on daytime functioning, therefore causing negative repercussions to both personal and professional activities. Indeed, there is accumulating evidence demonstrating how sleep disturbance may cause reductions in both athletic performance and physical activity levels (5,6). Moreover, it has been reported that sleep disturbance is a well-understood factor in all cause morbidity and mortality across a range of populations (7). To that end, changes in lifestyle factors, improved sleep hygiene, and nutrition have all been proposed as potential modulators for sleep disturbances to offset these issues (8,9).

The nutritional regulation of sleep has been of consistent research interest for many years, most notably in athletic populations, as has been recently addressed in a number of narrative reviews and an expert consensus statement (1,10,11). Several studies have examined various nutritional ingredients with proposed sleep enhancing qualities across a range of participant groups with and without sleep disorders, inclusive of high glycemic index carbohydrates (12,13), tryptophan (14), tart cherries (15,16), glycine (17), magnesium (18), and L-theanine (19). Within these investigations, there have been numerous suggested regulatory mechanisms, with metabolomic interactions of specific neurotransmitters involved in the sleep/wake cycle, purported to enhance regulation of the circadian rhythm of sleep (20). However, despite promising outcomes in the capacity to improve sleep, many of these studies have been conducted with predominantly male participants and with limited samples sizes to make definitive conclusions (21). Furthermore, these ingredients have principally been studied in isolation, with only one investigation to date examining their combined efficacy on various sleep outcome measures (22). On this basis, there is considerable scope to further investigate the combined benefit of these sleep enhancing agents, particularly given their reported individual effectiveness.

A recent critical review (23) has suggested that to sufficiently investigate and determine the true efficacy of any intervention treatment on sleep mechanisms, participants should be appropriately blinded to their sleeping patterns being monitored. To examine sleep as a primary variable, there are several available methods, with the criterion standard of polysomnography affording an in-depth view across numerous outcome measures, inclusive of sleep stages (24). However, despite the validity of this technique, measurement needs to be conducted within a laboratory setting, leading to indirect disturbances in participants normal sleeping patterns and reducing ecological validity as assessments cannot be conducted during free living conditions (23). Consequently, given the complexity of configuration before and during polysomnography utilization, this makes the capacity to deceive participants difficult, thereby not fulfilling the potential to truly blind experiments. Despite being limited in the capability to assess sleep stages, the use of actigraphy has been proposed as a method that is less invasive than polysomnography and has been suggested as less likely to interrupt participants regular sleeping patterns (11,25). As such, given that actigraphy monitors can be easily administered and also used to measure daytime activities, this facilitates the opportunity to blind participants and provide a more accurate overview of sleep assessment in free living conditions (26).

With this in mind, the aim of the present study was to test the hypothesis that a novel nutritional blend composed of tryptophan, glycine, magnesium, tart cherry powder, and L-theanine would improve subjective and objective measures of sleep in male and female participants during free living conditions. To this end, we adopted an experimental design inclusive of an initial familiarization period for the assessment of habitual sleeping patterns, light exposures, physical activity levels, and daily energy intakes before participating in a randomized crossover trial whereby participants ingested either an intervention or a placebo treatment. Importantly, the intervention was administered double blind, with participants being deceived as to the true aim of the study.

METHODS

Participants

The study was approved by the Liverpool John Moores University Research Ethics Committee (protocol code 21/SPS/003), and all procedures were conducted according to the manual of the Declaration of Helsinki 1964 and its later amendments. Sample size was determined *a priori* according to an effect size (ES) of $d = 1.00$, where a sample size of 16 would provide an α-value of 0.05 and a power of 0.96 (G*Power, version 3.1.9.6). Sixteen participants (9 males and 7 females; age: 24 ± 3 yr; body mass: 69.8 ± 11.6 kg; stature: 170.8 ± 9.1 cm) were recruited for the study and before commencement, were provided with an information sheet, and gave written informed consent. Inclusion criteria stipulated that participants must be (a) between 18 and 40 yr old; (b) nonsmokers; (c) not experiencing any medically diagnosed sleep disorders, environmental sleep disturbances, and/or taking sleep aid medications; (d) had not traveled across different time zones in the month before study; (e) have no history of neurological, cardiovascular, metabolic, and/or psychiatric illnesses or diseases; and (f) not be taking any medications or supplements, which may contraindicate the study.

Study Design

Initially, participants were familiarized to the study measures and procedures, while also establishing a baseline for nocturnal sleeping patterns, daily energy/macronutrient intakes, and activity profiles, which enabled duplication during the main intervention and placebo trials (see Fig. 1A and B). In a randomized, repeated-measures crossover and double-blind deception design, participants were then assigned to either the intervention or the placebo trial determined by an online randomization system (see Fig. 1C and D). Both the familiarization and the main trial assessments were 3-d in length, all of which commenced on the same days of the week for all participants and with a 4-d period between conditions to minimize any crossover effects. The intervention treatment composed of 1000 mg of tryptophan, 3000 mg of glycine, 300 mg of magnesium, 220 mg of

Copyright © 2022 by the American College of Sports Medicine. Unauthorized reproduction of this article is prohibited.

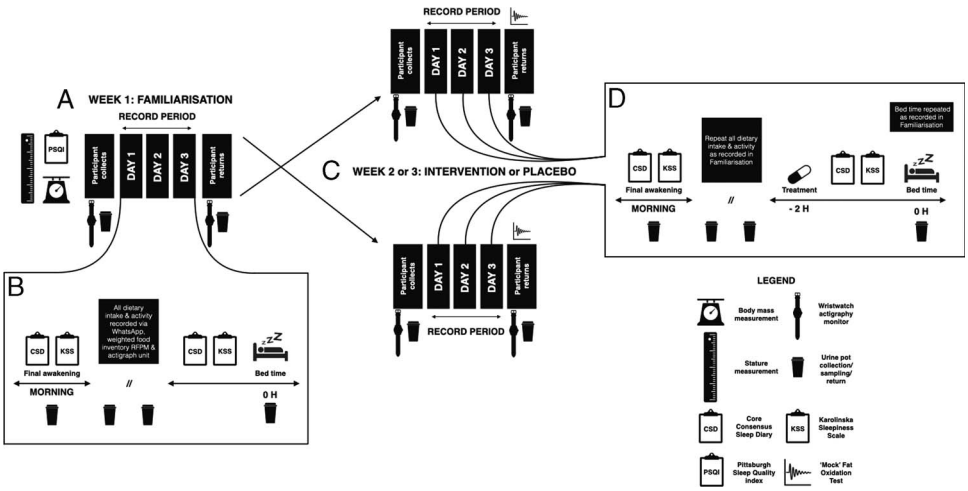

FIGURE 1—Overview of study design, inclusive of familiarization assessment period (A), familiarization assessment methods and procedures (B), intervention and placebo assessment periods (C), and intervention and placebo assessment methods and procedures (D).

tart cherry powder, and 200 mg of L-theanine, with the placebo treatment containing 4720 mg of cellulose, both of which were administered across all three nights of each respective main trial in opaque pill format. Additionally, the participants were also informed that the study aim was to assess the effect of two supplemental treatments on resting fat oxidation measured on the final day of main trial periods (see Fig. 1C) and with all subsequent assessments being administered for standardization between conditions. The intention of this deception blinding was to make participants unaware of the true aim of the study (27).

Study Measures

Body mass and stature. Body mass was measured to the nearest 0.01 kg on a calibrated digital scale, with measures of stature established to the nearest 0.1 cm using a free standing stadiometer (Seca 702 and 123; Seca GmbH, Hamburg, Germany).

Subjective sleep assessments. To examine subjective assessments of nocturnal sleep patterns, alongside evening and morning alertness and sleepiness, participants recorded responses within electronic versions of the Pittsburgh Quality Sleep Index (PSQI) (28), Core Consensus Sleep Diary (CSD) (29), and Karolinska Sleepiness Scale (KSS) (30). The PSQI is a 9-unit questionnaire, which retrospectively examines sleep across a 1-month period and is rated on seven components of sleep quality, latency, duration, efficiency, disturbance, medication, and day time dysfunction to generate a global score. The core CSD is a 10-unit survey, assessing a range of information related to sleep patterns, whereas the KSS is a 9-point Likert scale used to examine levels of alertness or sleepiness, both prospectively captured at the time of response. Upon bed time, each participant recorded the clock time for the first and second units within the core CSD, and the next morning upon getting out of bed, each participant recorded the information for the remainder of the units.

Objective sleep, activity, and light assessments. To objectively assess nocturnal sleep patterns, daytime activity profiles, and light luminous intensity (lux) exposure, each participant was equipped with a lightweight, waterproof, wrist-worn actigraphy monitor (MotionWatch 8; CamNtech Ltd., Cambridgeshire, United Kingdom). The triaxial accelerometer within the monitor detects acceleration ranging from 0.01-8g in magnitude, with a frequency of 3–11 Hz. Additionally, the monitor contains a digital human eye response optimized light sensor, capable of capturing 0 to 64,000 lx at a resolution of 0.25 to 16.0 lx in one sample per second. For sleep and activity measurement, the monitor has been assessed for validity and reliability of its algorithms against both polysomnography and indirect calorimetry across a range of demographics and is effective when set above medium sensitivity and epoch lengths of 30 s (31,32). Each monitor was configured in these modes, and participants were requested to press the marker button during specific morning and night time periods (see Study Procedures section). The recorded markers from the monitor and the collated information from the core CSD were then used to determine bed time, sleep onset, sleep offset, and get up time so that nocturnal sleep behaviors could be automatically calculated using the appropriate software (MotionWare version 1.2.5, CamNtech Ltd.). From the analysis, the following sleep characteristics were established: sleep onset latency (SOL), wake after sleep onset (WASO), TST, time in bed (TIB), and SE. After excluding sleep measurement periods, day time activity profiles were automatically calculated by the software into vigorous, moderate, low, and sedentary phases, with light exposure averaged across each of the night and day time periods.

Daily energy and macronutrient intakes. Within the familiarization period, all *ad libitum* food and fluid intake were prospectively recorded by participants using both the weighed food inventory and the remote food photography method (RFPM) (33). In brief, participants were guided on how to measure all food and fluids on an electronic digital scale (AccuWeight 201; Nanlgood Network Technology Co. Ltd., Shenzhen, China) and record the details within the MyFitnessPal application (Francisco Partners, San Francisco, CA). Additionally, participants were also instructed to capture

Copyright © 2022 by the American College of Sports Medicine. Unauthorized reproduction of this article is prohibited.

photographs at 45° and 90° angles before and after each eating and/or drinking occasion, which were recorded and time stamped via the WhatsApp application (WhatsApp Inc., Mountain View, CA) as previously described (34). These data were then assessed by two accredited sport nutrition practitioners using dietary analysis software (Nutritics V5; Nutritics Ltd., Swords, Co. Dublin, Ireland) to establish respective daily energy and macronutrient values (see Table 1), with systematic bias of measurements via independent *t*-tests highlighting no differences between analyses ($P < 0.05$). Within both main intervention and placebo trials, participants were instructed to repeat the eating and drinking patterns at the same times of day as in the familiarization period, with reminders inclusive of previous recorded images, descriptions, and MyFitnessPal data sent by members of the research team via the WhatsApp application. The participants were also instructed to follow the same procedures of weighed food inventory and RFPM as described above, for the confirmation of adherence. Compliance to these procedures was 100% across all participants, which ensured that daily energy and macronutrient values were duplicated across main trials.

Urine collection, storage, and metabolomic analysis. Urinary voids were collected by participants into sterilized measuring cylinders and immediately stored at −20°C within a home freezer unit. The samples were then returned to the research team, thawed at room temperature, centrifuged at 12,000*g* for 1 min, and subsequently transferred to 1.5-mL Eppendorf tubes for immediate storage at −80°C. A random sub group of $n = 8$ participants samples were then examined for targeted and untargeted metabolomic profiles. For sample preparation, 500 μL of urine was desalted using Zeba™ spin columns (Thermo Scientific, Hemel Hempstead, United Kingdom), flash frozen in liquid nitrogen, and lyophilized overnight. The samples were then reconstituted in 100-μL (90/10 v/v) LC/MS-grade water acetonitrile and spin filtered with Costar® Spin-X® 0·22 micron cellulose filters (Corning, Glendale, AZ) at 2000*g* for 5 min. The resulting concentrated urine samples were then transferred to 1.5-mL amber vials with 150-μL microinserts. For the targeted analysis of 6-sulfatoxymelatonin, conventional standard addition methodology was applied, whereby 1.0 mg of chemical standard (Biosynth®; Carbosynth Ltd., Berkshire, United Kingdom) was reconstituted in 100 μL of LC/MS-grade water to generate a 30-mM stock and then serial diluted down to a 10-μM working solution. The RT and the accurate mass were confirmed using hydrophilic liquid interaction chromatography (HILIC), and the mass spectrometry signal acquisition was performed and quantified using a single ion monitoring mode with 10 ppm mass channel tolerance. The HILIC profiling of the samples was performed on a Vanquish™ Ultra High Pressure Liquid Chromatography separation system connected to an IDX high-resolution mass spectrometer system (Thermo Scientific).

Mass spectrometry data were captured using the AcquieX acquisition workflow (data-dependent analysis methodology), and orbitrap detector operating parameters were MS1 mass resolution 60 K, for MS2 30 K collisional stepped energy (HCD) 20, 35, 50 in step collision mode. The mass scan range was 100–1000 *m/z*, RF lens was 35%, AGC target mode custom, and normalized AGC target was set to 25% (100% = 3e6) with a maximum injection time of 50 ms. The intensity threshold was set to 2e4, with all data acquired in profile mode. A corresponding extraction blank was used to created background exclusion list, and a pooled QC was used to create the inclusion list.

HILIC separation was achieved using a Waters™ Acquity UPLC BEH amide column (2.1 × 150 mm with particle size of 1.7 μm), operating at 65°C with a flow rate of 200 $\mu L \cdot min^{-1}$ (Waters Ltd., Wilmslow, UK). The LC gradient consisted of a binary buffer system, of which buffer A was 95/5% (LC/MS-grade water/ACN) and buffer B was 90/10% (ACN/water), with both containing 10 mM ammonium formate additives. Independent buffer systems were used for positive and negative modes, respectively. For positive modes, the pH of buffers was adjusted using 0.1% formic acid and for negative modes 0.1% ammonia solution. The LC gradients were the same for both polarities, with 95% B at T0 hold for 2 min and a linearly decrease to 50% B at 11 min hold for 4.5 min and return to the starting condition and hold for further 4.5 min (column stabilization). The total run was approximately 21.5 min per injection, with each volume and applied voltage being 3 μL/3.5 kV and 5 μL/2.5 kV for positive and negative modes, respectively. The HESI conditions for 200 $\mu L \cdot min^{-1}$ were sheath gas 35, aux gas 7, and sweep gas of 0, with an ion transfer tube temperature of 300°C and a vaporizer temperature of 275°C. Positive and negative data sets were processed via Thermo Scientific Compound Discoverer 3.2 with untargeted metabolomic workflow, alignment model adaptive curve, minimum intensity $1e^6$, S/N threshold 3:1, compound consolidation, mass tolerance 10 ppm, and retention time tolerance 0.3-min settings. Database matching was performed using Thermo Scientific *m/z* Cloud™ spectral library for targets with a similar index of >70% MS2 spectra. Those metabolites that could be matched ($n = 134$) and had a relative SD of 30% or less within the quality controls were retained for analysis.

Deception blinding protocol. Given the status of COVID-19 at the time of the study assessment period and with governmental restrictions on certain testing procedures in place, the research team were unable to conduct valid assessments of resting fat oxidation via indirect calorimetry. To compensate, a mock fat oxidation assessment was conceived, whereby participants were provided with an Exetainer®

TABLE 1. Estimated daily energy and macronutrient intakes assessed during the familiarization period, which were duplicated during main intervention and placebo trials.

Intake	Energy ($kcal \cdot d^{-1}$)	CHO $g \cdot d^{-1}$ ($g \cdot kg^{-1}$)	Protein $g \cdot d^{-1}$ ($g \cdot kg^{-1}$)	Fat $g \cdot d^{-1}$ ($g \cdot kg^{-1}$)
Day 1	2010 ± 567	257 ± 79 *(3.5 ± 1.0)*	101 ± 38 *(1.6 ± 0.5)*	62 ± 27 *(0.9 ± 0.3)*
Day 2	2114 ± 769	273 ± 90 *(3.7 ± 1.1)*	104 ± 49 *(1.6 ± 0.8)*	65 ± 39 *(1.0 ± 0.5)*
Day 3	2036 ± 782	264 ± 110 *(3.8 ± 1.2)*	100 ± 50 *(1.6 ± 0.7)*	63 ± 35 *(0.9 ± 0.4)*
Mean	2053 ± 640	265 ± 82 *(3.7 ± 1.0)*	101 ± 39 *(1.6 ± 0.6)*	63 ± 28 *(0.9 ± 0.3)*

Relative values are presented in italics within parenthesis.
CHO, carbohydrate.

APPLIED SCIENCES

Copyright © 2022 by the American College of Sports Medicine. Unauthorized reproduction of this article is prohibited.

collection vial (Labco Ltd., Ceredigion, United Kingdom) equipped with a bespoke breathing tube. After the final assessment day of both intervention and placebo main trials and upon waking, participants were instructed to blow into the breathing tube for a period of 60 s, so their subsequent breath sample could be assessed for endogenous fat utilization using indirect calorimetry. However, once samples were collected, they were discarded, given that they were not required for analysis within the primary examinations of the deception design.

Study Procedures

Familiarization. On the day before the beginning of the familiarization assessment period, participants were measured for body mass and stature, completed the PSQI, and then provided with the subjective and objective sleep measurement apparatus and urine cylinders as described in the Study Measures section. Participants were then subsequently categorized based on their global PSQI score, with <5 regarded as good sleep quality and >5 as poor sleep quality types (28). During this assessment period, all communication was recorded and time stamped via the WhatsApp application. On the evening before the first day of assessment, participants were instructed to wear the actigraphy monitor on their nondominant wrist, with recording programmed to begin at 6.00 am on the next morning. Participants were requested to continuously wear the monitor at all times, other than if there was a need to remove it for safety reasons, i.e., contact exercise. On the morning of each assessment day, upon sleep offset and getting out of bed, participants were instructed to press the marker button of the monitor, provide an initial urine sample, and then complete the electronic core CSD and KSS survey tools. Throughout the remainder of each assessment day, participants provided weighed food inventory and RFPM for each subsequent individual food and fluid intake occasion (see Study Measures section), while also indicating the details of any exercise bouts, inclusive of modality and load (i.e., duration, distance, sets, repetitions, etc.). A further two urine samples were collected at regular spaced intervals, based on the estimated get up and bed times derived from individual participant PSQI responses. Finally, participants were directed to complete the relevant section within the core CSD and KSS, press the wristwatch actigraphy monitor marker button when getting into bed, and press again when they intended to go to sleep. The monitor and urine samples were then returned to the research team on the day after the final assessment day (see Fig. 1A and B).

Main trials. After the familiarization period, sleep measures were analyzed from the actigraphy monitor, and if SE was ≥85% and TST ≥ 7 h, then participants were further classified as normal and below both of these values as deficient sleep types (2,3). During main trials, participants continued to be contacted via the WhatsApp online application, with collection of measures, morning procedures, energy/macronutrient/fluid intakes, exercise occasions, and urine sampling repeated in the same manner and time of day as established in the familiarization period. The placebo and intervention treatments were administered 2 h before each participant's respective bed time, which was replicated at the same time as within the familiarization period. The sleep offset and get up times of participants were not standardized to examine if any of the conditions resulted in an extended TIB (see Fig. 1C and D). Upon completion of the study, all participants were interviewed to assess the efficacy of the deception blinding procedures. Initially, participants were queried as to if they could detect any differences between the two main trials. Participants were then informed that the deception was not the true aim of the study and asked if they could speculate as to the real aim. Finally, participants were informed of the study aim and asked if they could identify the intervention and placebo conditions.

Statistical Analyses

Descriptive statistics inclusive of mean ± SD, 95% confidence intervals (95% CI), and frequency are provided for all data where appropriate, with analyses performed using SPSS® version 26 (IBM United Kingdom Ltd. Hampshire, United Kingdom) and the α-level set at $P < 0.05$. Residuals of the data were explored for normality using histograms and Shapiro–Wilk tests, with box plots examined for outliers. All data are presented as the mean of each 3-d period for the intervention and placebo trials; therefore, comparisons were assessed via parametric paired samples *t*-tests or nonparametric Wilcoxon tests for normally and nonnormally distributed data, respectively. Additionally, ES values were calculated using Hedges *g* with the following quantitative criteria to explain the practical significance of the findings: trivial <0.2, small 0.2–0.59, moderate 0.6–1.19, large 1.20–1.99, and very large >2.0 (35). Given the ordinal nature of the KSS data, Pearson's chi-square test was used to cross-tabulate frequency percentages between participant responses. Metabolomics data were autoscaled and cube root transformed using MetaboAnalyst 5.0 software (36) before performing detailed partial least squares discriminant analysis (PLS-DA) between intervention and placebo trial conditions. The relative abundance of the metabolites from the intervention with variable importance in projection factor >1 was then compared with the placebo trial.

RESULTS

Sleep classifications and bed times. Before starting the familiarization assessment period, $n = 8$ participants were subjectively classified as having poor sleep quality (50%) with the remaining $n = 8$ classified as having good sleep quality (50%) based on global PSQI scores. After the familiarization period, $n = 14$ participants were objectively classified as deficient (87.5%) and $n = 2$ classified as normal (12.5%) sleep types based on actigraphy monitoring. Mean bed time during the familiarization assessment period was 11.47 pm ± 26 min, which was consistently replicated at 11.48 pm ± 26 min and 11.50 pm ± 26 min in both the intervention and the placebo trials, respectively.

Activity profiles and light exposure. There were no differences in mean night time light exposure between intervention (1.06 ± 0.91 lx) and placebo (1.29 ± 0.95 lx) main trials,

APPLIED SCIENCES

Copyright © 2022 by the American College of Sports Medicine. Unauthorized reproduction of this article is prohibited.

with a −0.24 ± 0.53 lx variance of a small effect between conditions (P = 0.10, 95% CI = −0.53 to 0.55 lx, ES = 0.24). Additionally, there were also no differences in mean day time light exposure between intervention (351.66 ± 289.58 lx) and placebo (352.48 ± 361.74 lx) main trials, with a −0.80 ± 295.19 lx difference of a trivial effect between conditions (P = 0.99, 95% CI = −158.10 to 156.50 lx, ES = 0.01). Measurements of mean participant activity are highlighted in Figure 2, demonstrating no differences in vigorous (Fig. 2A; 9 ± 1 vs 8 ± 11 min·d^{-1}, P = 0.83, 95% CI = −4 to 5 min·d^{-1}, ES = 0.09), moderate (Fig. 2B; 25 ± 23 vs 35 ± 29 min·d^{-1}, P = 0.22, 95% CI = −25 to 6 min·d^{-1}, ES = 0.37), low (Fig. 2C; 473 ± 93 vs 453 ± 80 min·d^{-1}, P = 0.15, 95% CI = −7 to 47 min·d^{-1}, ES = 0.22), or sedentary (Fig. 2D; 360 ± 117 vs 378 ± 109 min·d^{-1}, P = 0.13, 95% CI = −40 to 5 min·d^{-1}, ES = 0.16) profiles, resulting in trivial to small effects between the intervention and the placebo main trials, respectively.

Actigraphy sleep assessments. For measures of SOL, there were differences of a large effect between the intervention (16 ± 6 min) and the placebo (40 ± 25 min) main trials, with a mean reduction of −24 ± 25 min (P = 0.002, 95% CI = −38 to −10 min, ES = 1.29) between conditions (see Fig. 3A). There were no differences in WASO between the intervention (49 ± 15 min) and the placebo (51 ± 17 min) main trials, resulting in a trivial effect based on the mean difference of −2 ± 11 min (P = 0.36, 95% CI = −8 to 3 min, ES = 0.12) as highlighted in Figure 3B. For measures of TST, there were differences of a small effect between the intervention (422 ± 34 min) and the placebo (400 ± 44 min) main trials due to a mean increase of 22 ± 32 min (P = 0.01, 95% CI = 6 to 39 min, ES = 0.55) between conditions (see Fig. 3C). There were no differences for overall TIB between the intervention (506 ± 38 min) and the placebo (495 ± 42 min) main trials, with a small effect given the mean difference of 11 ± 26 min (P = 0.13, 95% CI = −4 to 25 min, ES = 0.27) as shown in Figure 3D. Finally, there were differences of a small effect in measures of SE between the intervention (83.3% ± 3.5%) and the placebo (80.9% ± 5.9%) main trials, based on an increase in efficiency of 2.4% ± 3.9% (P = 0.03, 95% CI = 0.3% to 4.5%, ES = 0.48) between conditions (see Fig. 3E).

Subjective sleep assessments and deception blinding. There were no differences evident in subjective scores of evening sleepiness between the intervention and the placebo main trials (see Fig. 4A). However, there were differences in morning sleepiness (see Fig. 4B), whereby in the intervention trial participants reported a lower level of some signs of sleepiness when compared with the placebo trial (P = 0.02). During posttesting exit interviews, n = 12 (75%) participants were unable to identify that the true outcome of the study was to assess sleep, with the remaining n = 4 (25%) being aware. Of the n = 16 participants, n = 9 (56%) identified the intervention trial as the assessment period where they perceived they had their best sleep, n = 1 (6%) stated the placebo trial, and n = 6 (38%) were unable to identify any difference between conditions.

Targeted and untargeted urinary metabolomic analysis. Results of the PLS-DA visualization for both treatments are presented in Figure 5, demonstrating a distinct phenotypic change in the urinary metabolome between the intervention and the placebo treatments. Twenty-five database-matched metabolites were highlighted to be statistically different between

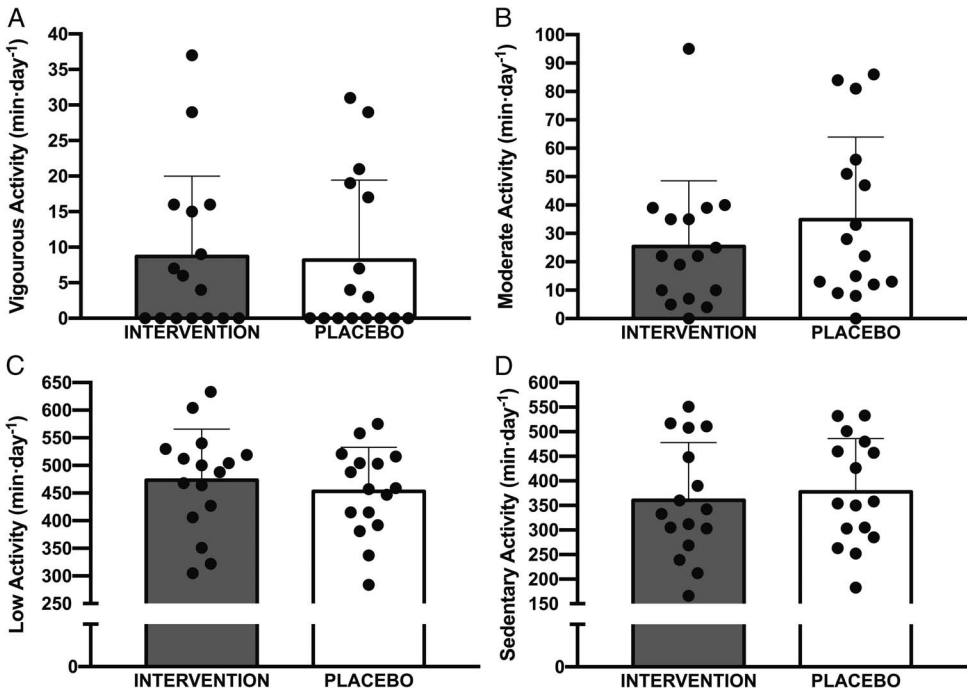

FIGURE 2—Comparison of mean and individual responses for vigorous (A), moderate (B), low (C), and sedentary (D) activity profiles between the intervention (*gray bars*) and the placebo (*white bars*) trials.

APPLIED SCIENCES

Copyright © 2022 by the American College of Sports Medicine. Unauthorized reproduction of this article is prohibited.

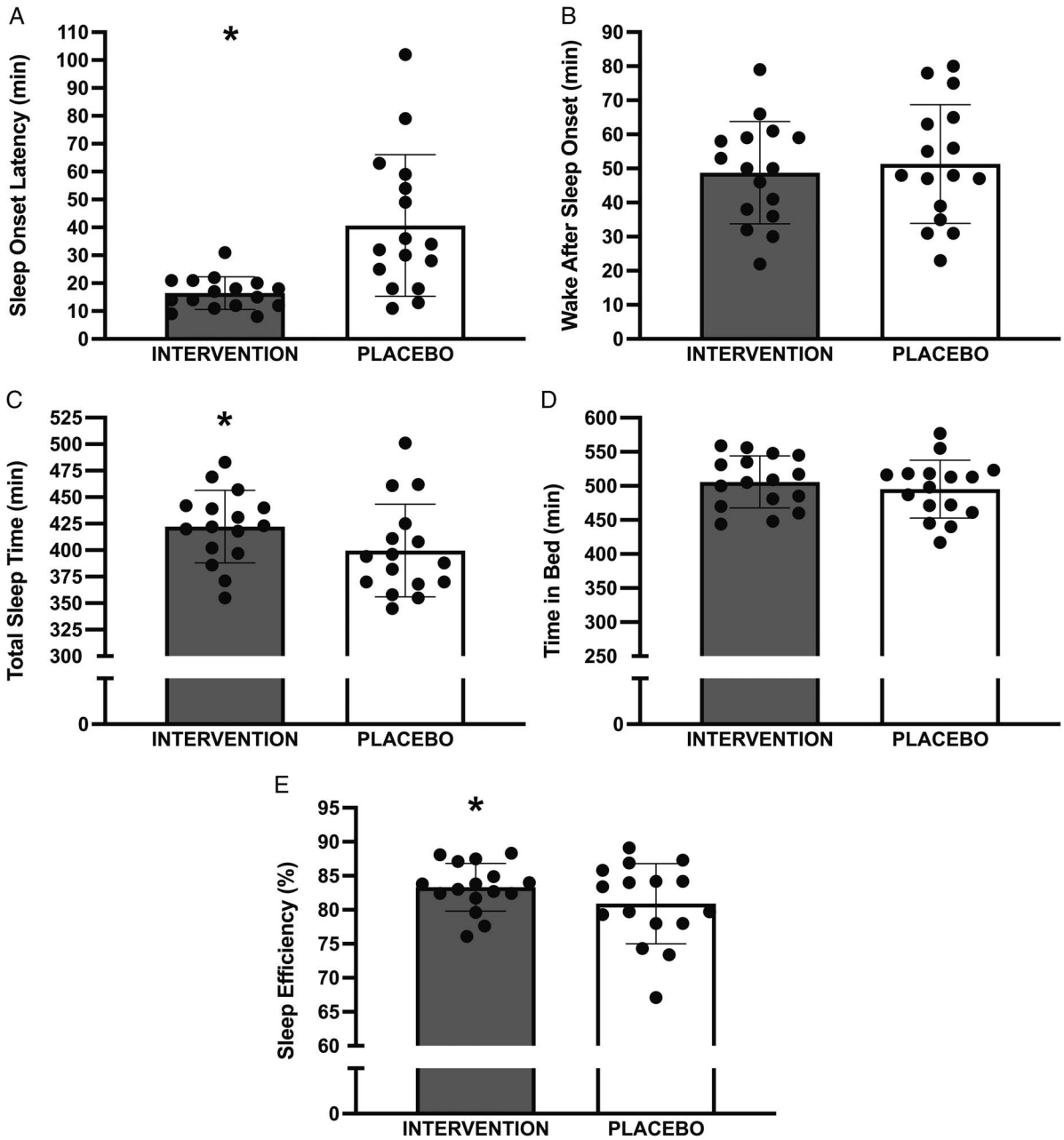

FIGURE 3—Comparison of mean and individual responses for SOL (A), WASO (B), TST (C), TIB (D), and SE (E) outcomes between the intervention (*gray bars*) and the placebo (*white bars*) trials. *Significant difference between conditions ($P < 0.05$).

the intervention and the placebo trials based on variable importance in projection score factor >1. Figure 6 highlights those metabolites identified as proxy markers of sleep regulation inclusive of the targeted metabolite (a) 6-sulfatoxymelatonin, alongside untargeted amino acids (b) D-serine and (c) L-glutamic acid, both of which were up- and downregulated between the intervention and the placebo trials, respectively.

DISCUSSION

In a randomized, repeated-measures crossover and double-blind deception design, the aim of the present study was to test the hypothesis that a novel nutritional blend composed of tryptophan, glycine, magnesium, tart cherry extract, and L-theanine would improve subjective and objective measures of sleep in male and female participants during free living conditions. The data from this study demonstrate that a blend of sleep enhancing agents shortened time to fall asleep and extended time asleep, therefore resulting in greater SE and leading to reduced feelings of morning sleepiness. Evaluation of the urinary metabolome also suggests that such alterations to sleeping patterns may be mediated by the upregulation of 6-sulfatoxymelatonin and glycine coagonist D-serine, in parallel to a downregulation of the excitatory neurotransmitter L-glutamic acid, which are modulators of the sleep/wake cycle, respectively. Taken together, these results

Copyright © 2022 by the American College of Sports Medicine. Unauthorized reproduction of this article is prohibited.

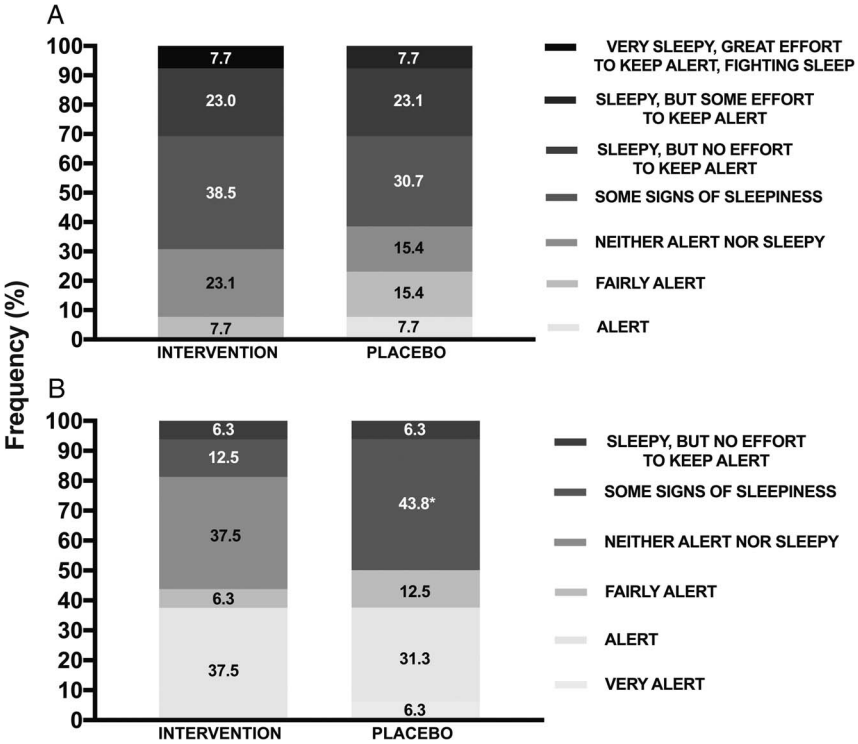

FIGURE 4—The frequency of subjective KSS scores across evening (A) and morning (B) measurement periods between intervention and placebo trials. *Significant difference between equitable scoring measure ($P < 0.05$).

indicate the efficacy of this novel blend of nutritional ingredients to improve outcome measures of sleep during free living conditions, in both males and females without medically diagnosed sleep disorders.

A key strength of this investigation was in deception blinding participants to sleep assessment as the true aim of the study. On this basis, 75% of participants were unaware that sleep was being assessed as a primary outcome measure, and over 50% identified they had a perceived sense of improved sleep during the intervention trial. Although this method has been used in other nutritional investigations (27), to the authors' knowledge this study represents the first application of this approach when examining the potential for nutritional modulation of subjective and objective sleep outcomes and therefore enhances the applicability of the findings (23). Additionally, participants were also exposed to an initial assessment period with the dual objective of familiarization to outcome measures, while also establishing a baseline for standardization of bed times, daily nutritional intake, activity profiles, and light exposure within the main intervention and placebo trials. This has been previously highlighted as an important consideration in deciphering the translational potential of nutrition intervention studies (37) and serves to further establish the ecological validity of the outcome results.

To date, only one other study by Halson et al. (22) has examined the effect of a combined blend of sleep active ingredients, inclusive of high glycemic carbohydrates, tart cherry, tryptophan (in the form of α-lactalbumin), adenosine-5-monophosphate, valerian, and L-theanine in a double-blind, placebo-controlled crossover design. While using polysomnography in contrast to the actigraphy measures within this study, Halson and colleagues highlighted a 9-min reduction in SOL between the intervention and the placebo treatments, yet contrary to our findings, they found no other differences in subjective or objective measures of sleep outcomes between conditions. It should be noted that a limitation within the present study is the inability of a reductionist approach to understand the individual or combined effects of the agents within the intervention treatment, on the capacity to improve the subjective and objective measures of sleep. However, given the strength of the study design, the nutritional blend did indeed affect some of these measures, and to that end, the subsequent sections will serve to discuss the potential sleep enhancing mechanisms of each ingredient contained within the intervention treatment.

Dietary tryptophan (Trp) is a well-established sleep active ingredient, which has over four decades of research within this area (14). Trp crosses the blood–brain barrier by active transport, therefore acting to release the monoamine neurotransmitter serotonin, a precursor of melatonin (38). However, given that other large neutral amino acids (LNAA) also compete to cross the blood–brain active barrier system, it is the addition of an adequate dose of dietary Trp (1000–3000 mg), alongside an optimal Trp–LNAA ratio, which increases brain bioavailability and can subsequently lead to enhanced sleep through the upregulation of melatonin (14,39). In comparison with our study, Hartmann and Spinweber (40) found that a dose of 1000 mg of tryptophan resulted in significantly reducing

Copyright © 2022 by the American College of Sports Medicine. Unauthorized reproduction of this article is prohibited.

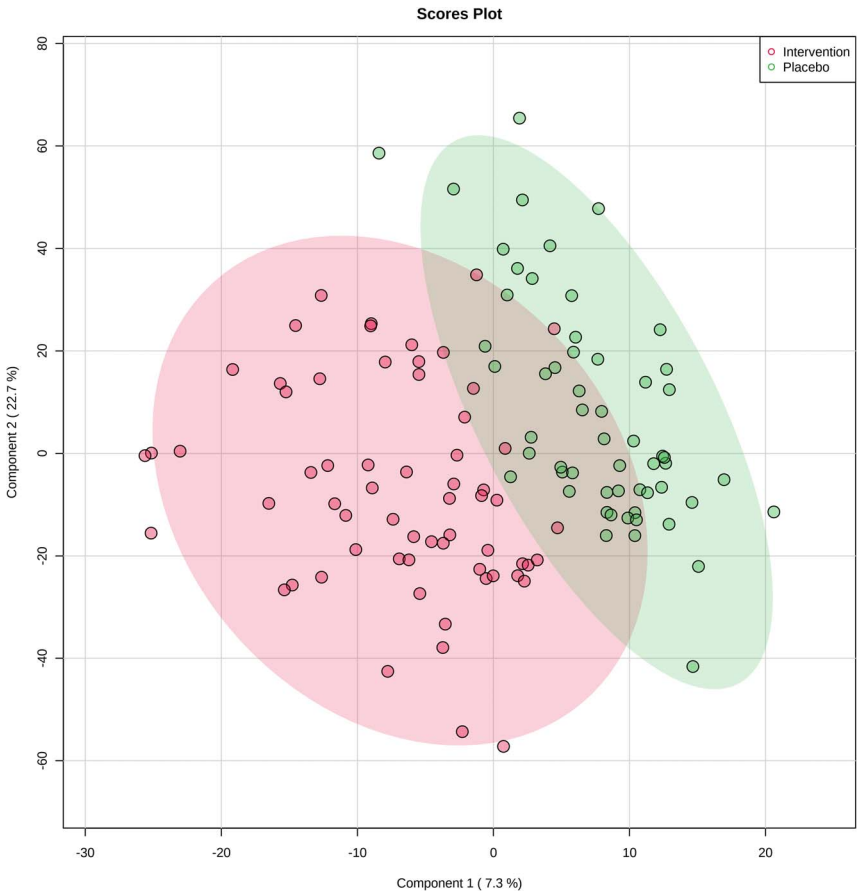

FIGURE 5—Partial least squares discriminant analysis of key identified urinary metabolomes between the intervention (*red*) and the placebo (*green*) trials.

subjective assessments of SOL in those with mild insomnia (over 30 min SOL). Additionally, Chauffard-Alboucq and colleagues (41) also highlighted that a dose of 1000 mg of tryptophan was effective in quadrupling the Trp–LNAA ratio, while also leading to enhanced feelings of sleepiness after 90 min of ingestion. Based on these investigations, it could be postulated that the dosage of tryptophan included in the presented study increased brain Trp levels, thereby upregulating serotonin and melatonin pathways. Despite not directly assessing the Trp–LNAA ratio, this notion is supported by an enhanced metabolomic abundance of urinary 6-sulfatoxymelatonin (see Fig. 6A), which could further explain the exhibited improvements in sleep during the intervention trial. In parallel to Trp, tart cherries are known to contain endogenous melatonin (42), which can also directly regulate sleep mechanisms via the aforementioned pathways. Howatson and colleagues (15) demonstrated that a 7-d administration of tart cherry juice resulted in significant improvements in sleep time and quality. Indeed, although the provision of the intervention treatment within the present study was for a 3-d period, this resulted in similar favorable increases in both TST (22 vs 34 min) and enhancements in SE (2.4 vs 5.5%). Furthermore, Howatson et al. also highlighted significant increases in urinary melatonin during tart cherry supplementation, corresponding to the amplified metabolomic abundance of urinary 6-sulfatoxymelatonin within this study.

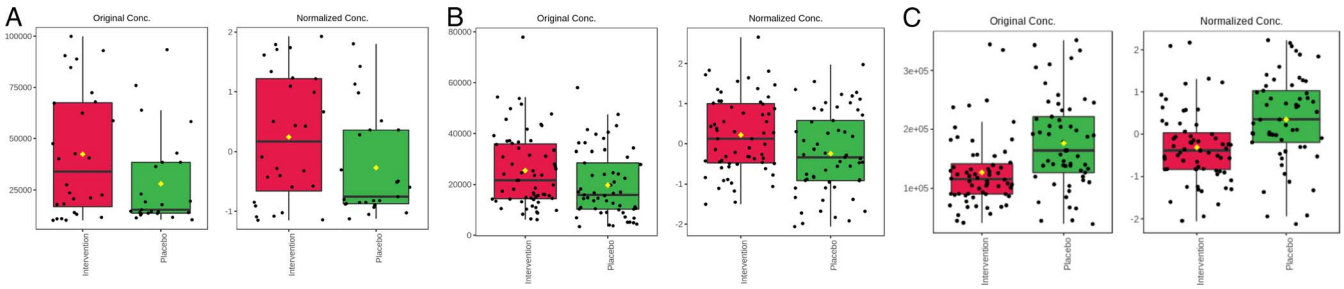

FIGURE 6—Original and normalized concentration of key urinary metabolites 6-sulfatoxymelatonin (A), D-serine (B), and L-glutamic acid (C) between the intervention (*red bars*) and the placebo (*green bars*) trials.

APPLIED SCIENCES

Copyright © 2022 by the American College of Sports Medicine. Unauthorized reproduction of this article is prohibited.

Glycine and L-theanine are amino acids, which are both endogenously synthesized/stored and can be ingested through diet. In a similar manner to Trp, glycine is also able to cross the blood–brain barrier, which alongside coagonist D-serine, targets the *N*-methyl-D-aspartate (NMDA) receptors within the suprachiasmatic nucleus, further acting to upregulate whole-body vasodilation and therefore reduce core temperature leading to subsequent sleep enhancement (17). Additionally, L-theanine also crosses the blood–brain barrier and acts on the ionotropic glutamate receptors and partially on the NMDA receptors to upregulate both serotonin and glycine (19). A study by Yamadera and colleagues (43) examined the effects of glycine on subjective sleep parameters and objective sleep via polysomnography. While using different measures compared with those within this study, a comparable dose of 3000 mg of glycine improved objective assessments of SOL and subjective assessments of sleep quality and daytime sleepiness. Although no assessments of core temperature were conducted within the present study, given the known effects of core temperature reduction on upregulating sleep (44), it is tempting to speculate that the glycine modulation of this mechanism may have also contributed to the improvements in sleep outcome measures, particularly given the increased metabolomic abundance of D-serine (see Fig. 6B). However, to date this has only been conducted in animal model studies, with more conclusive evidence needed within human populations (45). In a similar manner to the present study, Rao and colleagues (19) also examined the efficacy of L-theanine on sleep via both subjective sleep scores and objective measurements of actigraphy. Using a 200-mg dose and across a 3-d measurement period, the intervention significantly improved subjective assessments of sleep, alongside an actigraphy derived 2.8% improvement in SE when compared with a placebo condition, in direct parallel to the results of this study.

An additional interesting finding within this investigation was a downregulated metabolomic abundance of L-glutamic acid within the intervention compared with the placebo trials (see Fig. 6C). L-glutamic acid has been highlighted as a potent excitatory neurotransmitter, resulting in the stimulation of the orexinergic neurons, which in turn promotes arousal and inhibition of both non–rapid eye and rapid eye movement sleep stages (46). Conversely, both endogenous melatonin and D-serine have been demonstrated to attenuate the excitatory neurotransmitter action of L-glutamic acid via inhibition of specific NMDA receptor binding sites (47,48). To that end, it is tempting to speculate that the upregulated metabolomic abundance of urinary 6-sulfatoxymelatonin and D-serine in the intervention trial may have resulted in the downregulated metabolomic abundance of L-glutamic acid, therefore leading to greater subjective and objective sleep enhancement in comparison with the placebo trial. However, much of the former evidence in this area has principally been conducted in rodent models and more research is needed in human trials to substantiate this hypothesis.

Magnesium is a key micronutrient, which also acts to regulate the conductivity of the NMDA receptors, while aiding the binding of monoamines such as serotonin to their respective sites (49), presenting the assumption that magnesium deficiency may lead to disturbances in sleep, which can be offset with exogenous supplementation (50). A recent systematic review and meta-analysis highlighted that the administration of 320–729 $mg \cdot d^{-1}$ magnesium resulted in improvements in subjective and objective sleep, which included 17-min reductions in SOL and 16-min increases in TST when compared with placebo conditions (50). However, it should be noted that these treatments were delivered across various dosing protocols, in predominantly elderly populations with magnesium deficiencies and across a range of sleep disturbances and disorders. Consequently, given that magnesium status was not assessed in the present study participant cohort, it is difficult to consider the interaction of this ingredient within the intervention treatment and with more research on the efficacy of magnesium supplementation in diverse populations needed.

Finally, the present data may be considered of practical relevance for those individuals who partake in regular exercise and physical activities. Indeed, in athletic populations, it has been established that sleep disturbances can result in negative consequences on physical performance, exercise recovery, and exercise-induced injuries/diseases, with these outcomes being mediated by an enhanced perception of exertion via increased psychophysiological strain (5). Furthermore, reductions in sleep duration and quality are likely to reduce participation in physical activity, which contributes to a wide range of health related outcomes within general populations (6). Accordingly, improvements in sleep have been shown to enhance exercise performance and increase the likelihood of participation of physical activities in athletic and general populations, respectively (5,6). On this basis, further investigation implementing the nutritional blend proposed within this study and the potential effects of ameliorated sleep outcomes on exercise performance and physical activity is certainly warranted.

CONCLUSIONS

In conclusion, this study highlights the efficacy of a novel blend of sleep enhancing nutritional agents on subjective and objective measurements of sleep in both male and female participants without medically diagnosed sleep disorders and during free living conditions. Additionally, a key strength of this investigation included 75% of participants being unaware that sleep was being measured as a primary outcome, therefore enhancing the ecological validity and applicability of the findings. The combination of ingredients contained within the blend led to significant decreases in SOL and increases in TST and SE, alongside subjective reductions in morning sleepiness, as has been demonstrated within the previous research literature. Furthermore, potential mechanisms for these effects may have been as the result of metabolomes related to the sleep/wake cycle. The replication of this study to examine

Copyright © 2022 by the American College of Sports Medicine. Unauthorized reproduction of this article is prohibited.

potential efficacy across longer time periods and in those with medically diagnosed sleep disorders is also warranted.

The authors thank Mr. Steven Mann, Dr. Ben Edwards, and Professor Neil Walsh for their assistance during the data conceptualization and collection period. This work was funded by a research grant from Science in Sport (SiS plc).

James P. Morton is a consultant for SiS plc. The other authors disclose no conflicts of interest. SiS plc had no role in the design, execution, interpretation, or writing of the study. The results of the study are presented clearly, honestly, without fabrication, falsification, or inappropriate data manipulation. The results of the present study do not constitute endorsement by the American College of Sports Medicine.

REFERENCES

1. Doherty R, Madigan S, Warrington G, Ellis J. Sleep and nutrition interactions: implications for athletes. *Nutrients*. 2019;11(4):822.
2. Hirshkowitz M, Whiton K, Albert SM, et al. National Sleep Foundation's sleep time duration recommendations: methodology and results summary. *Sleep Health*. 2015;1(1):40–3.
3. Ohayon M, Wickwire EM, Hirshkowitz M, et al. National Sleep Foundation's sleep quality recommendations: first report. *Sleep Health*. 2017;3(1):6–19.
4. Léger D, Poursain B, Neubauer D, Uchiyama M. An international survey of sleeping problems in the general population. *Curr Med Res Opin*. 2008;24(1):307–17.
5. Chennaoui M, Arnal PJ, Sauvet F, Léger D. Sleep and exercise: a reciprocal issue? *Sleep Med Rev*. 2015;20:59–72.
6. Kline CE. The bidirectional relationship between exercise and sleep: implications for exercise adherence and sleep improvement. *Am J Lifestyle Med*. 2014;8(6):375–9.
7. Saltychev M, Juhola J, Ervasti J, et al. Association of changes in lifestyle with changes in sleep difficulties: an analysis of 38400 participants over a 16-year follow-up. *BMJ Open*. 2021;11(10):e050046.
8. Albakri U, Drotos E, Meertens R. Sleep health promotion interventions and their effectiveness: an umbrella review. *Int J Environ Res Public Health*. 2021;18(11):5533.
9. Burrows T, Fenton S, Duncan M. Diet and sleep health: a scoping review of intervention studies in adults. *J Hum Nutr Diet*. 2020;33(3):308–29.
10. Halson SL. Sleep in elite athletes and nutritional interventions to enhance sleep. *Sports Med*. 2014;44(Suppl 1):S13–23.
11. Walsh NP, Halson SL, Sargent C, et al. Sleep and the athlete: narrative review and 2021 expert consensus recommendations. *Br J Sports Med*. 2020;bjsports-2020-102025.
12. Vlahoyiannis A, Aphamis G, Andreou E, Samoutis G, Sakkas GK, Giannaki CD. Effects of high vs. low glycemic index of post-exercise meals on sleep and exercise performance: a randomized, double-blind, counterbalanced polysomnographic study. *Nutrients*. 2018;10(11):1795.
13. Afaghi A, O'Connor H, Chow CM. High-glycemic-index carbohydrate meals shorten sleep onset. *Am J Clin Nutr*. 2007;85(2):426–30.
14. Silber BY, Schmitt JA. Effects of tryptophan loading on human cognition, mood, and sleep. *Neurosci Biobehav Rev*. 2010;34(3):387–407.
15. Howatson G, Bell PG, Tallent J, Middleton B, McHugh MP, Ellis J. Effect of tart cherry juice (*Prunus cerasus*) on melatonin levels and enhanced sleep quality. *Eur J Nutr*. 2012;51(8):909–16.
16. Losso JN, Finley JW, Karki N, et al. Pilot study of the tart cherry juice for the treatment of insomnia and investigation of mechanisms. *Am J Ther*. 2018;25(2):e194–201.
17. Bannai M, Kawai N. New therapeutic strategy for amino acid medicine: glycine improves the quality of sleep. *J Pharmacol Sci*. 2012;118(2):145–8.
18. Held K, Antonijevic IA, Künzel H, et al. Oral Mg(2+) supplementation reverses age-related neuroendocrine and sleep EEG changes in humans. *Pharmacopsychiatry*. 2002;35(4):135–43.
19. Rao TP, Ozeki M, Juneja LR. In search of a safe natural sleep aid. *J Am Coll Nutr*. 2015;34(5):436–47.
20. Jenkins TA, Nguyen JC, Polglaze KE, Bertrand PP. Influence of tryptophan and serotonin on mood and cognition with a possible role of the gut-brain axis. *Nutrients*. 2016;8(1):56.
21. St-Onge MP, Mikic A, Pietrolungo CE. Effects of diet on sleep quality. *Adv Nutr*. 2016;7(5):938–49.
22. Halson SL, Shaw G, Versey N, et al. Optimisation and validation of a nutritional intervention to enhance sleep quality and quantity. *Nutrients*. 2020;12(9):2579.
23. Vlahoyiannis A, Sakkas GK, Manconi M, Aphamis G, Giannaki CD. A critical review on sleep assessment methodologies in athletic populations: factors to be considered. *Sleep Med*. 2020;74:211–23.
24. Depner CM, Cheng PC, Devine JK, et al. Wearable technologies for developing sleep and circadian biomarkers: a summary of workshop discussions. *Sleep*. 2020;43(2):zsz254.
25. Lujan MR, Perez-Pozuelo I, Grandner MA. Past, present, and future of multisensory wearable technology to monitor sleep and circadian rhythms. *Front Digit Health*. 2021;3:721919.
26. Kirk U, Ngnoumen C, Clausel A, Purvis CK. Using actigraphy and heart rate variability (HRV) to assess sleep quality and sleep arousal of three app-based interventions: sleep music, sleepcasts, and guided mindfulness. *J Cogn Enhanc*. 2022;6(2):216–31.
27. James LJ, Moss J, Henry J, Papadopoulou C, Mears SA. Hypohydration impairs endurance performance: a blinded study. *Physiol Rep*. 2017;5(12):e13315.
28. Buysse DJ, Reynolds CF 3rd, Monk TH, Berman SR, Kupfer DJ. The Pittsburgh sleep quality index: a new instrument for psychiatric practice and research. *Psychiatry Res*. 1989;28(2):193–213.
29. Carney CE, Buysse DJ, Ancoli-Israel S, et al. The consensus sleep diary: standardizing prospective sleep self-monitoring. *Sleep*. 2012;35(2):287–302.
30. Akerstedt T, Gillberg M. Subjective and objective sleepiness in the active individual. *Int J Neurosci*. 1990;52(1–2):29–37.
31. Elbaz M, Yauy K, Metlaine A, Martoni M, Leger D. Validation of a new actigraph motion watch versus polysomnography on 70 healthy and suspected sleep-disordered subjects. *J Sleep Res*. 2012;21(Suppl 1):218.
32. Landry GJ, Falck RS, Beets MW, Liu-Ambrose T. Measuring physical activity in older adults: calibrating cut-points for the MotionWatch 8©. *Front Aging Neurosci*. 2015;7:165.
33. Martin CK, Han H, Coulon SM, Allen HR, Champagne CM, Anton SD. A novel method to remotely measure food intake of free-living individuals in real time: the remote food photography method. *Br J Nutr*. 2009;101(3):446–56.
34. Hannon MP, Parker LJF, Carney DJ, et al. Energy requirements of male academy soccer players from the English Premier League. *Med Sci Sports Exerc*. 2021;53(1):200–10.
35. Hopkins WG, Marshall SW, Batterham AM, Hanin J. Progressive statistics for studies in sports medicine and exercise science. *Med Sci Sports Exerc*. 2009;41(1):3–13.
36. Pang Z, Chong J, Zhou G, et al. MetaboAnalyst 5.0: narrowing the gap between raw spectra and functional insights. *Nucleic Acids Res*. 2021;49(W1):W388–96.
37. Close GL, Kasper AM, Morton JP. From paper to podium: quantifying the translational potential of performance nutrition research. *Sports Med*. 2019;49(Suppl 1):25–37.
38. Richardson GS. The human circadian system in normal and disordered sleep. *J Clin Psychiatry*. 2005;66(Suppl 9):3–9; quiz 42-3.
39. Hajak G, Huether G, Blanke J, et al. The influence of intravenous L-tryptophan on plasma melatonin and sleep in men. *Pharmacopsychiatry*. 1991;24(1):17–20.

Copyright © 2022 by the American College of Sports Medicine. Unauthorized reproduction of this article is prohibited.

40. Hartmann E, Spinweber CL. Sleep induced by L-tryptophan. Effect of dosages within the normal dietary intake. *J Nerv Ment Dis*. 1979; 167(8):497–9.
41. Chauffard-Alboucq FA, Leathwood PD, Dormond CA. Changes in plasma amino acid and subjective sleepiness ratings in humans after consuming L-tryptophan/maltodextrin mixes. *Amino Acids*. 1991; 1(1):37–45.
42. Burkhardt S, Tan DX, Manchester LC, Hardeland R, Reiter RJ. Detection and quantification of the antioxidant melatonin in Montmorency and Balaton tart cherries (*Prunus cerasus*). *J Agric Food Chem*. 2001;49(10):4898–902.
43. Yamadera W, Inagawa K, Chiba S, Bannai M, Takahashi M, Nakayama K. Glycine ingestion improves subjective sleep quality in human volunteers, correlating with polysomnographic changes. *Sleep Biol Rhythms*. 2007;5(2):126–31.
44. Barrett J, Lack L, Morris M. The sleep-evoked decrease of body temperature. *Sleep*. 1993;16(2):93–9.
45. Kawai N, Sakai N, Okuro M, et al. The sleep-promoting and hypothermic effects of glycine are mediated by NMDA receptors in the suprachiasmatic nucleus. *Neuropsychopharmacology*. 2015;40(6): 1405–16.
46. Alam MA, Mallick BN. Glutamic acid stimulation of the perifornical-lateral hypothalamic area promotes arousal and inhibits non-REM/REM sleep. *Neurosci Lett*. 2008;439(3):281–6.
47. Bavithra S, Sugantha Priya E, Selvakumar K, Krishnamoorthy G, Arunakaran J. Effect of melatonin on glutamate: BDNF signaling in the cerebral cortex of polychlorinated biphenyls (PCBs)-exposed adult male rats. *Neurochem Res*. 2015;40(9):1858–69.
48. Yovanno RA, Chou TH, Brantley SJ, Furukawa H, Lau AY. Excitatory and inhibitory D-serine binding to the NMDA receptor. *bioRxiv*. 2022.03.07.483247.
49. Chollet D, Franken P, Raffin Y, Malafosse A, Widmer J, Tafti M. Blood and brain magnesium in inbred mice and their correlation with sleep quality. *Am J Physiol Regul Integr Comp Physiol*. 2000;279(6): R2173–8.
50. Mah J, Pitre T. Oral magnesium supplementation for insomnia in older adults: a systematic review & meta-analysis. *BMC Complement Med Ther*. 2021;21(1):125.

Copyright © 2022 by the American College of Sports Medicine. Unauthorized reproduction of this article is prohibited.